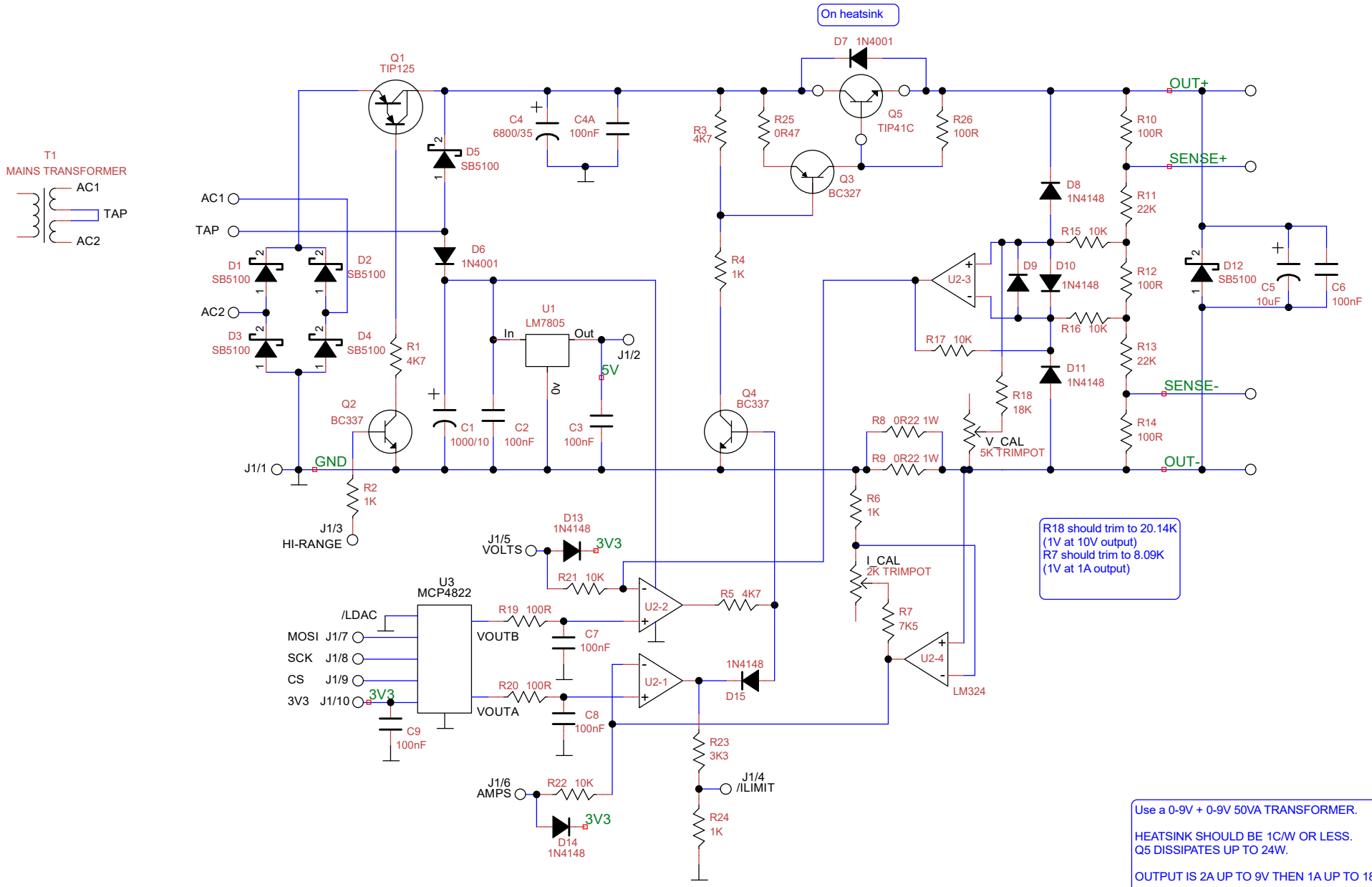

Title Mini PSU		
Author Mick Ames Me? Organised?		
File D:\User\Desktop\psu 0.dsn		Document
Revision 0.1	Date April/May 2023	Sheets 1 of 2

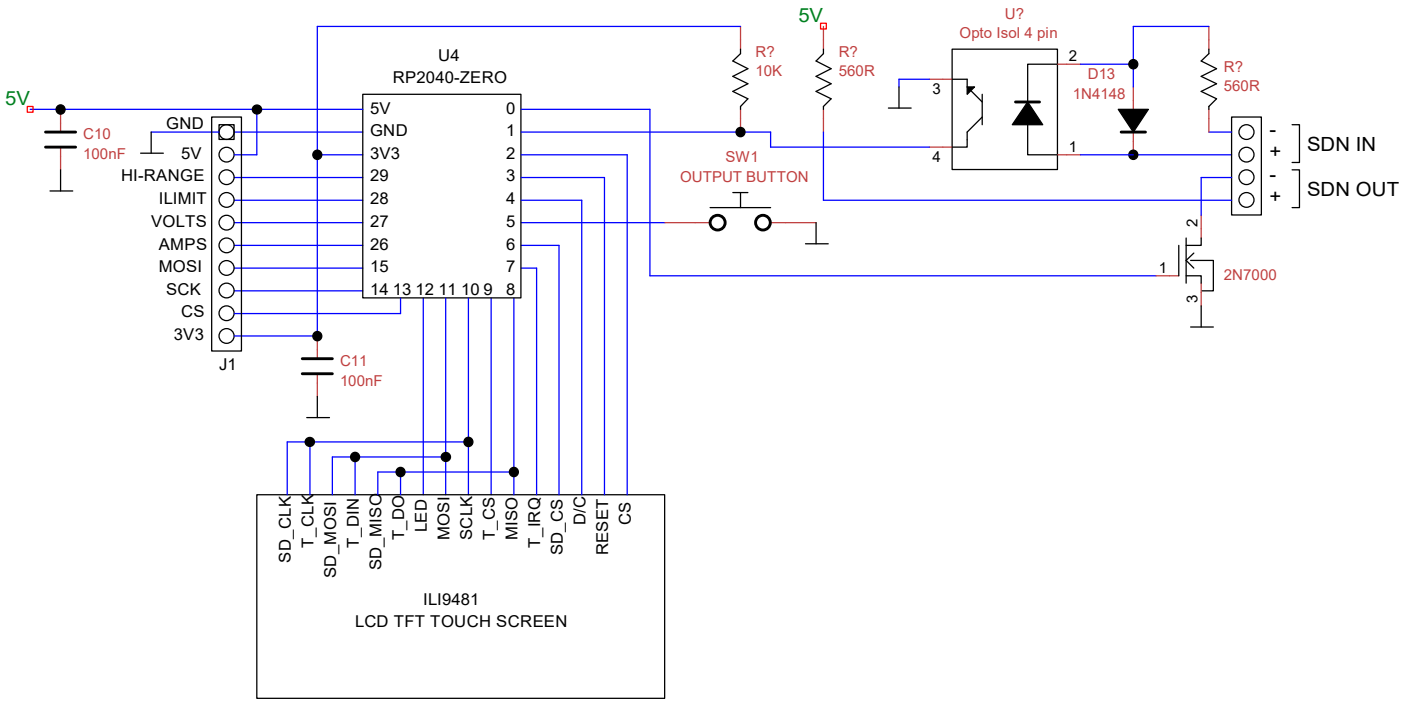

Title Mini PSU		
Author Mick Ames Me? Organised?		
File D:\User\Desktop\psu 0.dsn		Document
Revision 0.1	Date April/May 2023	Sheets 2 of 2